For proper operation of the elevator, whether trying to run on inspection or automatic, the following inputs must be energized in the correct sequence.

1. If the car is not at a terminal landing All slowdown limit inputs must be high .SDI,SD2 SDx,SUI,SU2 SUX x=max number of limits.(Refer to drawing 050)

2. All safety inputs must be high all the time. GV, HS, Cs and ICS inputs. (Refer to drawing 060 car toc and access)

3. Gates and Locks (GL1) input must be high when the doors are fully closed.(Refer to drawing 060 car toc and access)

4. The (RDY) input must be high in order to initiate an SM from the spu.(Refer to drawing 060 car toc and access)

5. The Overload Fault (OLF) input must be high all the time. The OLF input is controlled by GPI I..(Refer to drawing 070 Drive Logic Interface)

6. The DRVS On Off Switch (DRVS) input must be high all the times.(Refer to drawing 070 Drive Logic Interface)

7. The SCR Fault trip(trip) input must be high all the time. The trip input is confirmed by CEN relay is up. FLT ouput is high, EMST is high, EMSD input is high.(Refer to drawing 080)

8. The Normal Power (NP) input must be high all the times. Refer to the Emergency Power(Refer to drawing 200.)

9. The 5CR On Off Switch (SCRS) input must be high all the times.

Car diagnostic display shows typical static inputs needed to initiate a start sequence. The top slow down limits are not high because the car is at the top landing.

Car Diagnostic Display

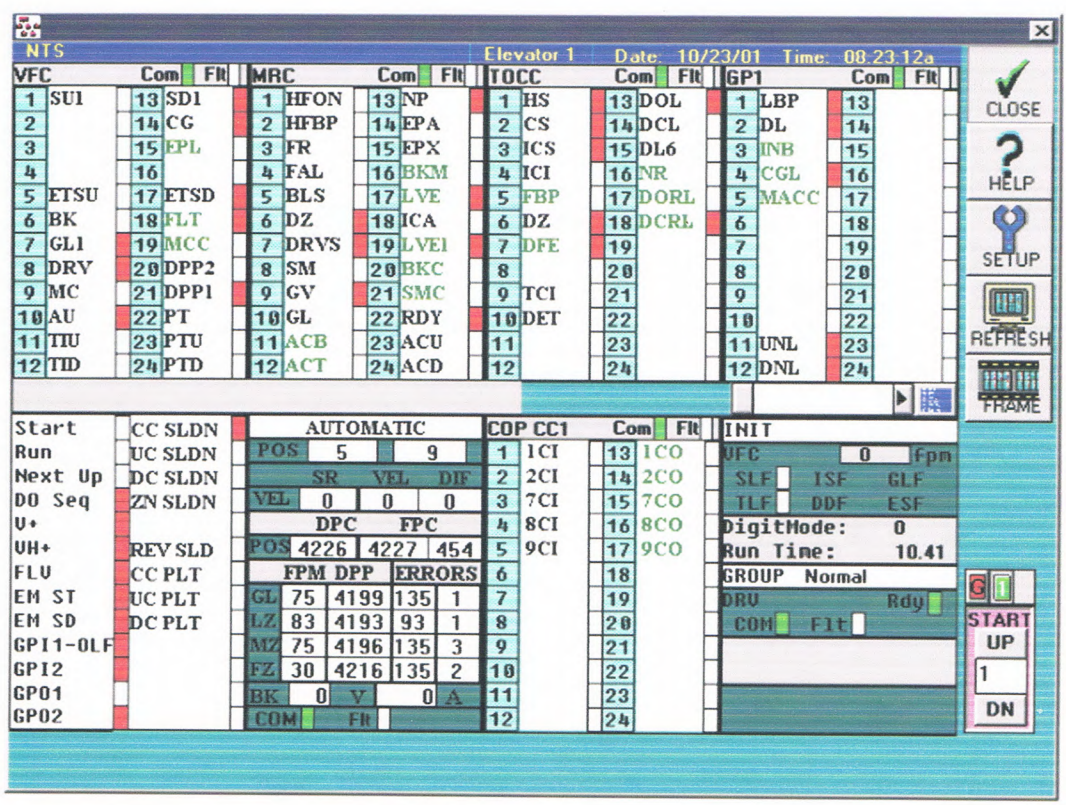

USE COPPER CONDUCTORS ONLY

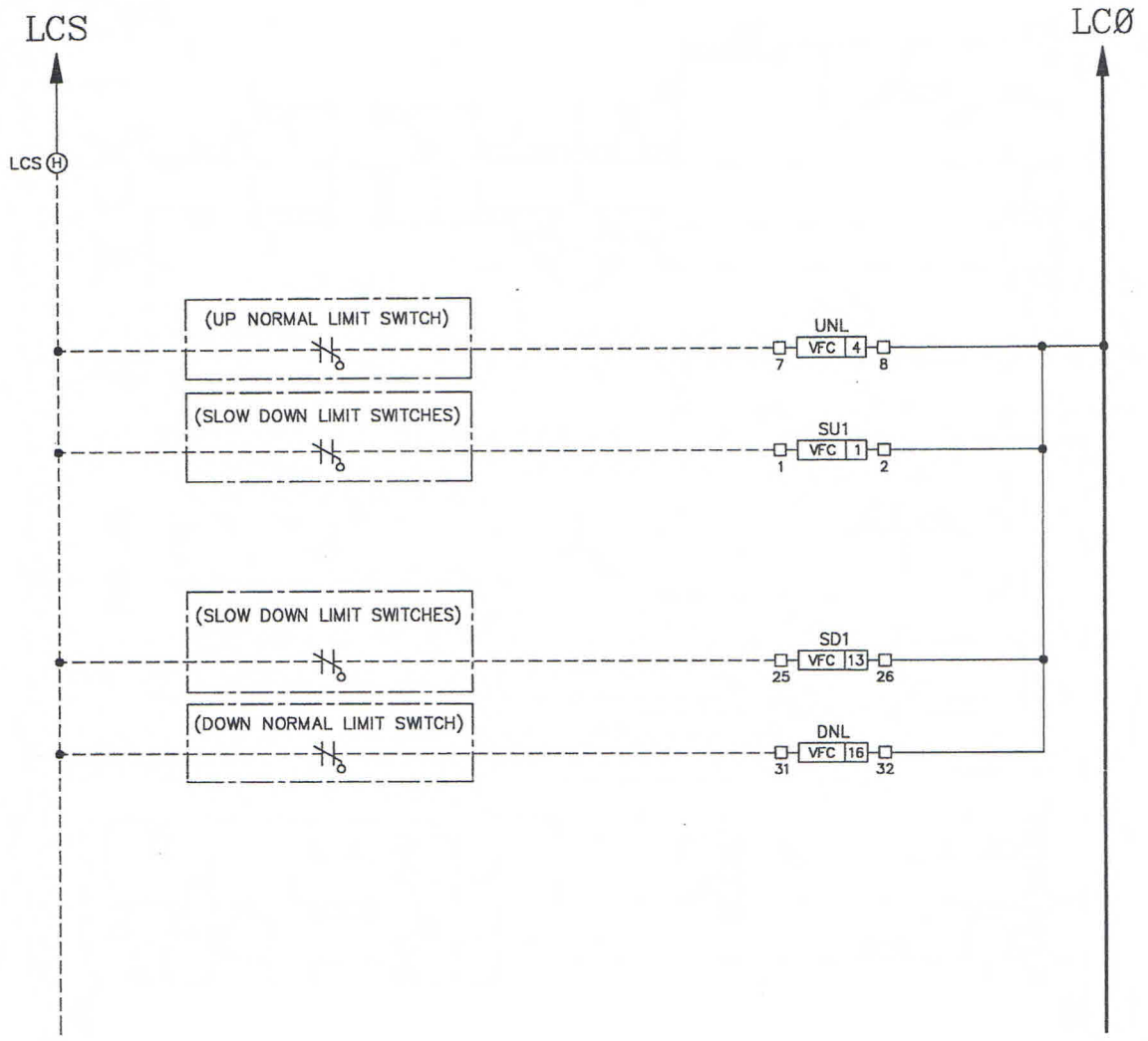

HOISTWAY TERMINAL LIMITS WITH SHAFT LIMITS

DRAWING NUM 050

COMPUTERIZED ELEVATOR CONTROL CORP.
636 11TH AVENUE NEW YORK, NEW YORK 10036 TEL. (212) 397-0606

JOB NAME/LOC.: EMBASSY SQUARE SUITES WA, DC (AMTECH)		
DATE: 04/12/96	CEC JOB NO. 2989	CAR NO. 1 THRU 4
DRAWN BY: NF	DWG. NO. 050HTL	REV. 6-9-94

04/12/96 08:36 E:\JOBS\2800\2989\050HTL.DWG

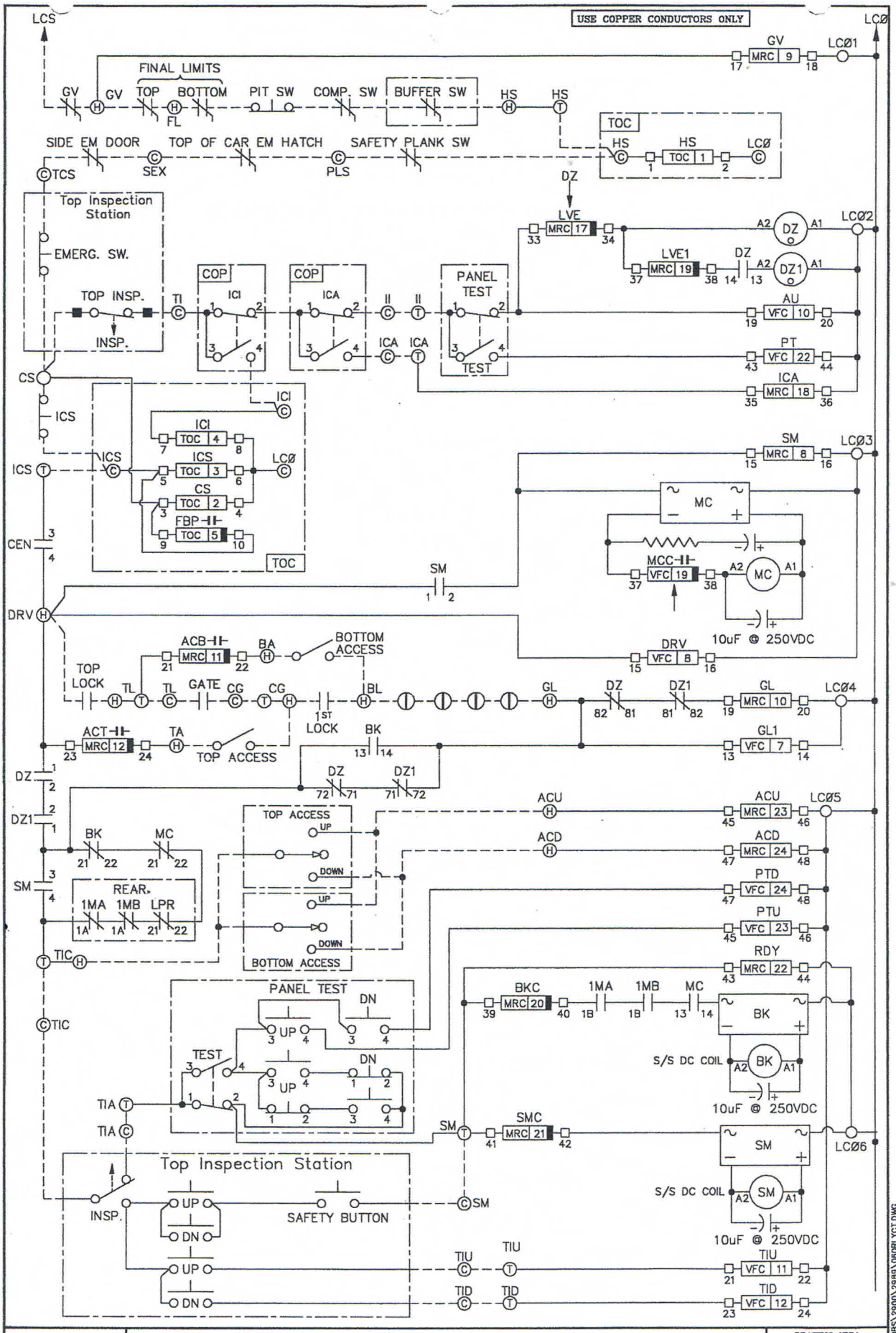

DSD412	RELAY CONTROLLER (CAR TOC & ACCESS)	DRAWING NUM 060

COMPUTERIZED ELEVATOR CONTROL CORP.
636 11TH AVENUE NEW YORK, NEW YORK 10036 TEL. (212) 397-0606

JOB NAME/LOC.: EMBASSY SQUARE SUITES WA, DC (AMTECH)		
DATE: 04/12/96	CEC JOB NO. 2989	CAR NO. 1 THRU 4
DRAWN BY: NF	DWG. NO. 060RLYCT	REV. 1-31-95

04/12/96 08:41 E:\JOBS\2900\2989\060RLYCT.DWG

USE COPPER CONDUCTORS ONLY

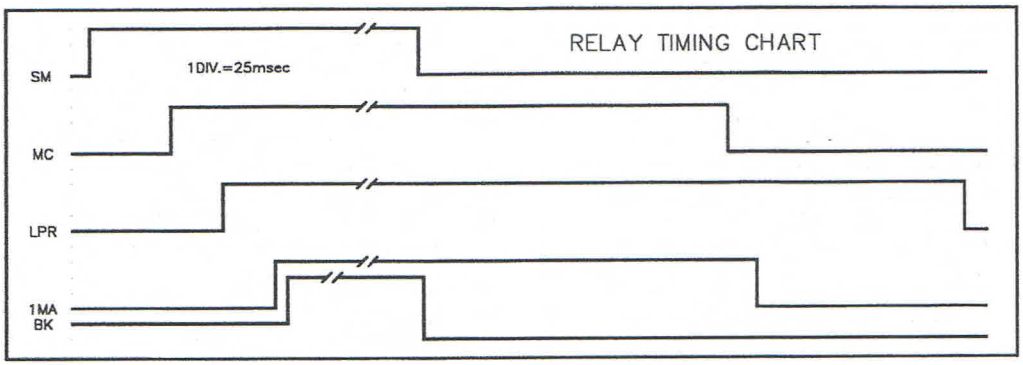

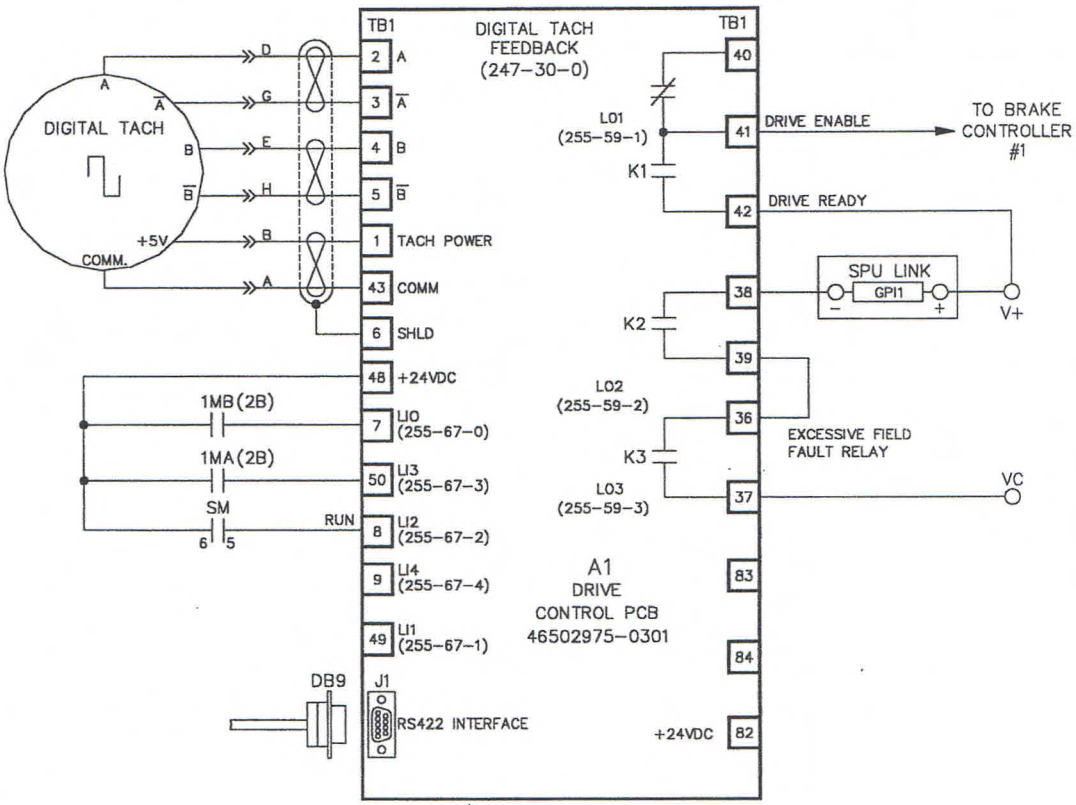

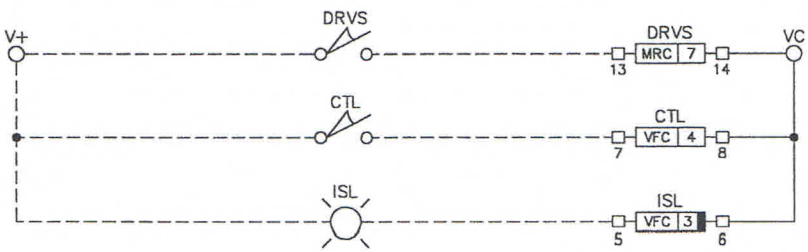

DSD412	DRIVE LOGIC INTERFACE	DRAWING NUM 070

COMPUTERIZED ELEVATOR CONTROL CORP.
636 11TH AVENUE NEW YORK, NEW YORK 10036 TEL. (212) 397-0606

JOB NAME/LOC.: EMBASSY SQUARE SUITES WA, DC (AMTECH)		
DATE: 04/12/96	CEC JOB NO. 2989	CAR NO. 1 THRU 4
DRAWN BY: NF	DWG. NO. 070DRVLG	REV. 3-21-95

04/16/96 15:34 E:\JOBS\2900\2989\070DRVLG.DWG

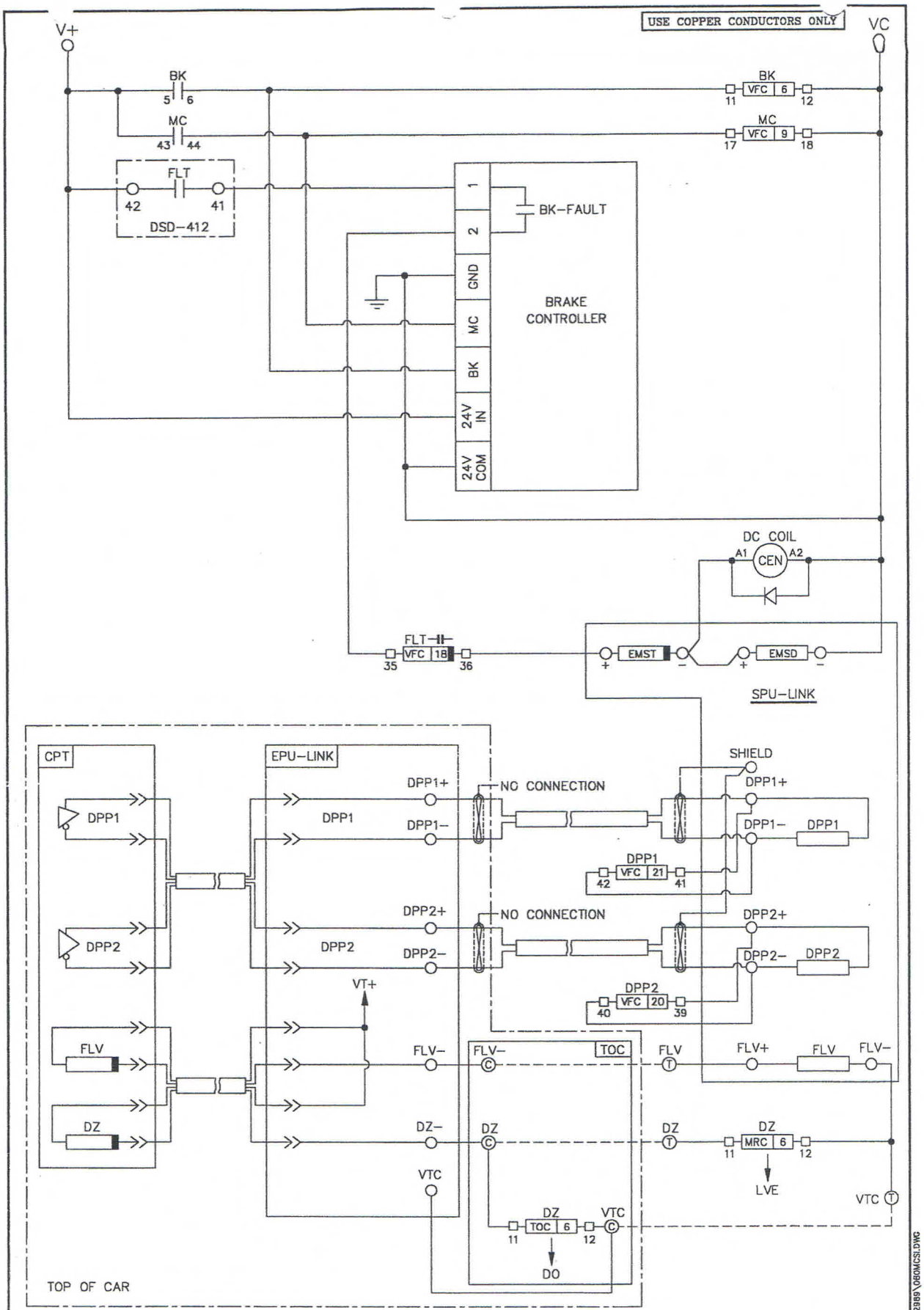

NOTE: FOR MODULE LOCATION REFER TO SMI.

DSD412	MICRO CONTROLLER SYSTEM INTERFACE (WITH TOC BOX)	DRAWING NUM 080

COMPUTERIZED ELEVATOR CONTROL CORP. 636 11TH AVENUE NEW YORK, NEW YORK 10036 TEL. (212) 397-0606	JOB NAME/LOC.: EMBASSY SQUARE SUITES WA, DC (AMTECH)		
	DATE: 04/12/96	CEC JOB NO. 2989	CAR NO. 1 THRU 4
	DRAWN BY: NF	DWG. NO. 080MCSI	REV. 3-21-95

04/12/96 08:46 E:\JOBS\2989\080MCSI.DWG

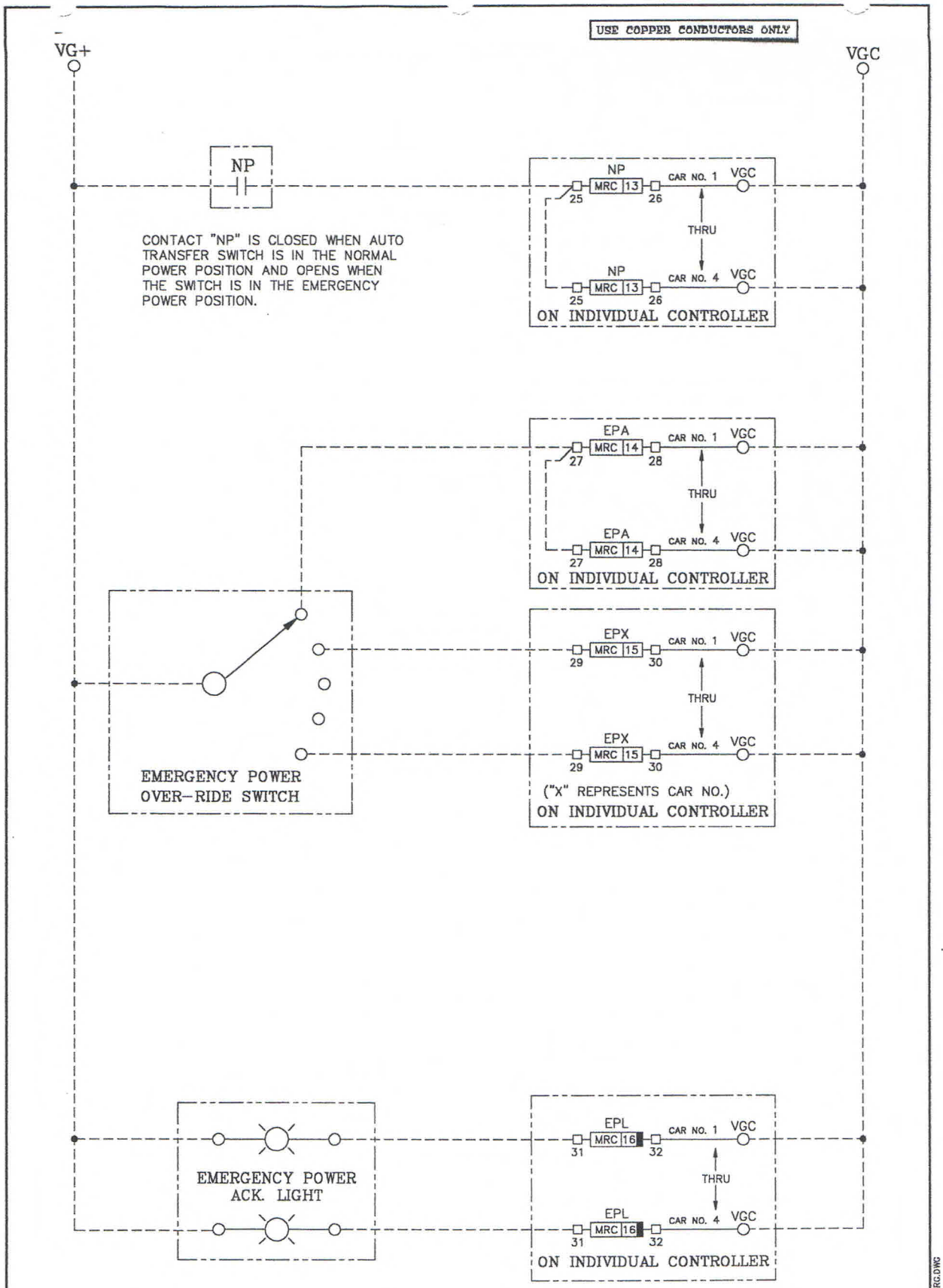

EMERGENCY POWER CIRCUITRY

DRAWING NUM 200

COMPUTERIZED ELEVATOR CONTROL CORP.
636 11TH AVENUE NEW YORK, NEW YORK 10036 TEL. (212) 397-0606

JOB NAME/LOC.: EMBASSY SQUARE SUITES WA, DC (AMTECH)		
DATE: 04/12/96	CEC JOB NO. 2989	CAR NO. 1 THRU 4
DRAWN BY: NF	DWG. NO. 200EMERG	REV. 12-29-94

04/12/96 11:21 E:\JOBS\2900\2989\200EMERG.DWG

Car Diagnostic Display